Flanged linear guide

VR20W-Z1-H-580

One wide flange carriage on a 580 mm cut rail. Rail width: 20 mm.
Matched assembly with light preload (Z1) and high precision (H).

SPECIFICATION	VALUE	UNIT
Basic dynamic load rating, C	17.8	kN
Basic static load rating, C0	29.4	kN
Precision class	H / High	-
Preload class	Z1 / Light	-
Carriage profile	W / Wide flange	-
Assembly height	30	mm
Carriage width x length	63 x 77.5	mm
Carriage hole pattern	53 x 40	mm
Carriage mounting threads	4 x M6	-
Rail width	20	mm
Cut rail length	580	mm
Rail hole pitch	60	mm
First / last hole offset	20 / 20	mm
Rail mounting holes	10	-

Load ratings are per carriage. Precision class does not specify positioning accuracy of a complete axis.

MOUNTING DIMENSIONS

Dimensions in mm. Reference views only, not to scale.

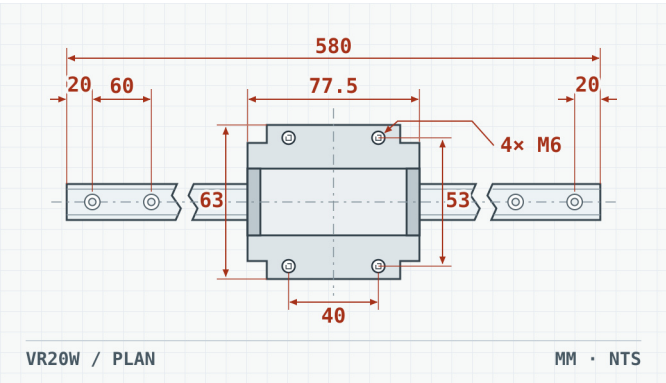

A Plan view

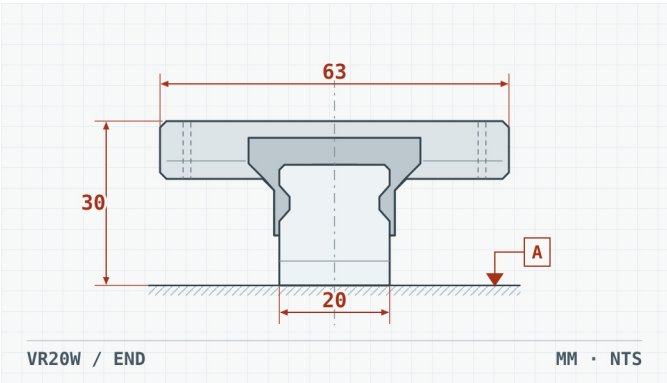

B End elevation

Rail drilling: 10 holes at 60 mm pitch, with 20 mm offsets at both ends.
Carriage mounting: four M6 threads on a 53 mm transverse x 40 mm longitudinal pattern.